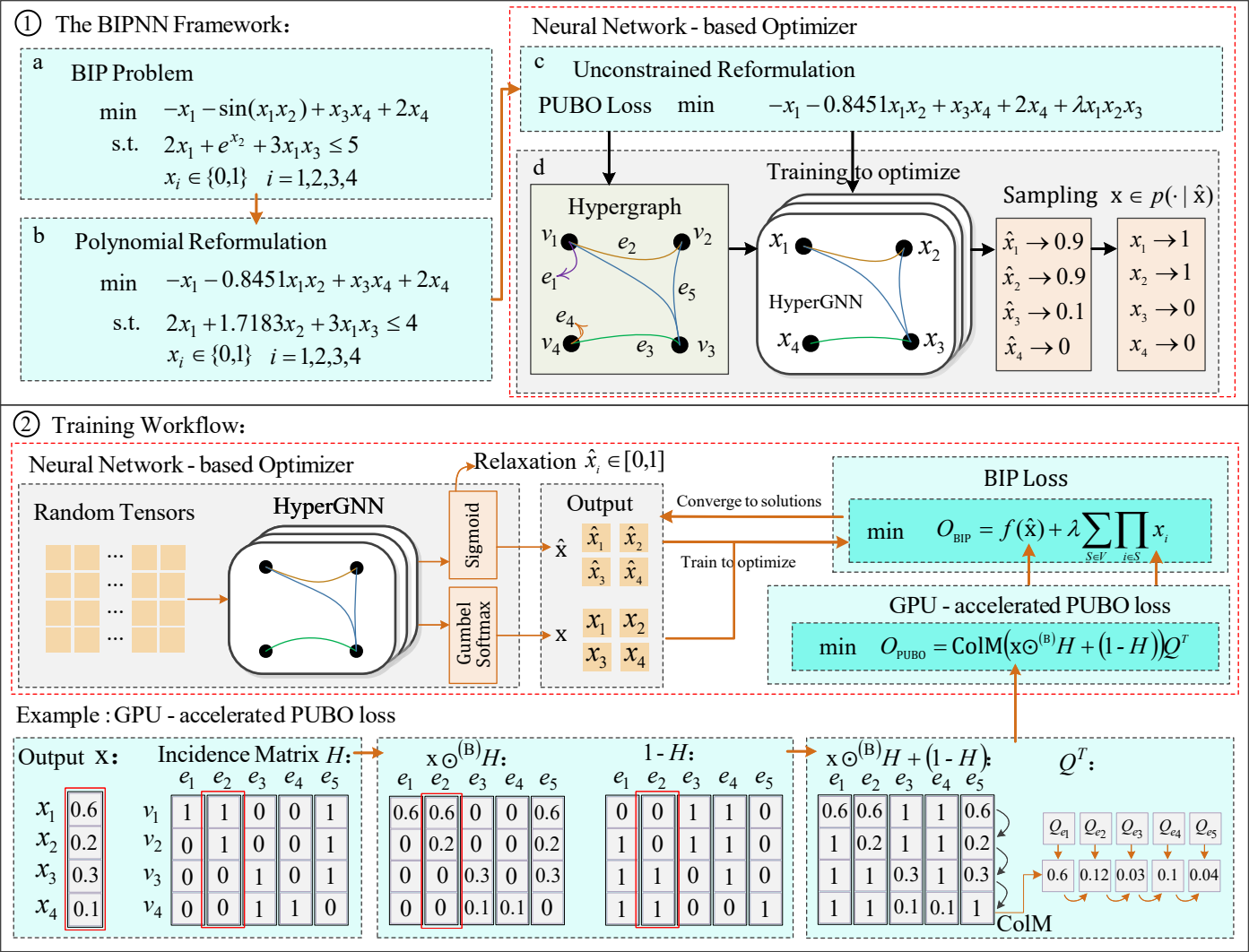
① The BIPNN Framework:
a BIP Problem
min $-x_1 - \sin(x_1x_2) + x_3x_4 + 2x_4$
s.t. $2x_1 + e^{x_2} + 3x_1x_3 \le 5$
$x_i \in \{0,1\}$ $i = 1,2,3,4$
b Polynomial Reformulation
min $-x_1 - 0.8451x_1x_2 + x_3x_4 + 2x_4$
s.t. $2x_1 + 1.7183x_2 + 3x_1x_3 \le 4$
$x_i \in \{0,1\}$ $i = 1,2,3,4$
Neural Network - based Optimizer
c Unconstrained Reformulation
PUBO Loss min $-x_1 - 0.8451x_1x_2 + x_3x_4 + 2x_4 + \lambda x_1x_2x_3$
d
Hypergraph
Training to optimize
HyperGNN
Sampling $x \in p(\cdot \mid \hat{x})$
$\hat{x}_1 \to 0.9$
$\hat{x}_2 \to 0.9$
$\hat{x}_3 \to 0.1$
$\hat{x}_4 \to 0$
$x_1 \to 1$
$x_2 \to 1$
$x_3 \to 0$
$x_4 \to 0$
② Training Workflow:
Neural Network - based Optimizer
Relaxation $\hat{x}_i \in [0,1]$
Random Tensors
HyperGNN
Sigmoid
Gumbel Softmax
Output
Converge to solutions
Train to optimize
BIP Loss
min $O_{\text{BIP}} = f(\hat{x}) + \lambda \sum_{S \in V} \prod_{i \in S} x_i$
GPU - accelerated PUBO loss
min $O_{\text{PUBO}} = \text{ColM}\left(x \odot^{(B)} H + (1 - H)\right) Q^T$
Example : GPU - accelerated PUBO loss
Output x:
Incidence Matrix H:
$x \odot^{(B)} H$:
$1 - H$:
$x \odot^{(B)} H + (1 - H)$:
Q^T:
ColM